montalvo...the best

ACCESSORIES
BRAKE SAFETY COVER AND BRAKE MOUNTING PLATE

Montalvo accessory brake safety cover and brake mounting plate are designed to fit a wide range of Montalvo brakes including the CD Series, Standard Series, HP Series and HPS Series. They are manufactured from quality materials, are easily installed and offer no compromise in workspace safety. Order them with your new system or separately to enhance an existing installation.

COVER

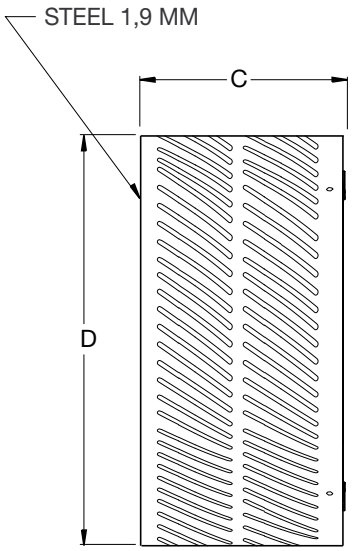

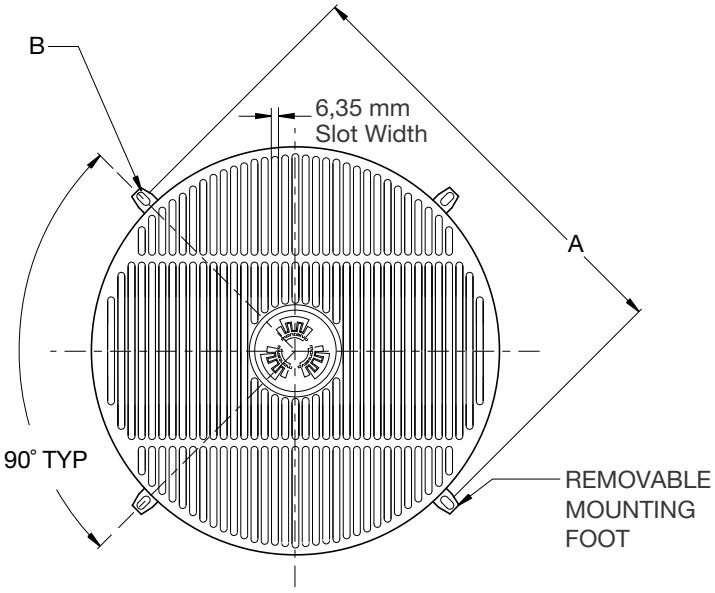

NOTE:
The 600 Series brake cover may be used on 801-802 brakes. The HP6 Series brake cover may be used on the HP81 brake. The 800 Series brake cover may be used on 1001-1004 brakes.

Dimensions in mm.

Model	A	B	C	D
CD 100	226	M6	97	198
CD 130	251	M6	122	223
CD 190	440	M8	199	401
STD 600	440	M8	199	407
STD 800	541	M8	199	502
STD 1000	617	M8	199	579
STD 1400	673	M8	225	635
STD 1700	716	M8	230	677
HP 6	440	M8	230	407
HP 8	541	M8	276	502
HP 10	617	M8	301	579
HP 14	673	M8	352	635
HP 17	716	M8	403	677
HPS 06	238	M6	113	289
HPS 08	289	M6	125	331
HPS 10	340	M6	130	380

Technical details subject to change without notice.

MOUNTING PLATE

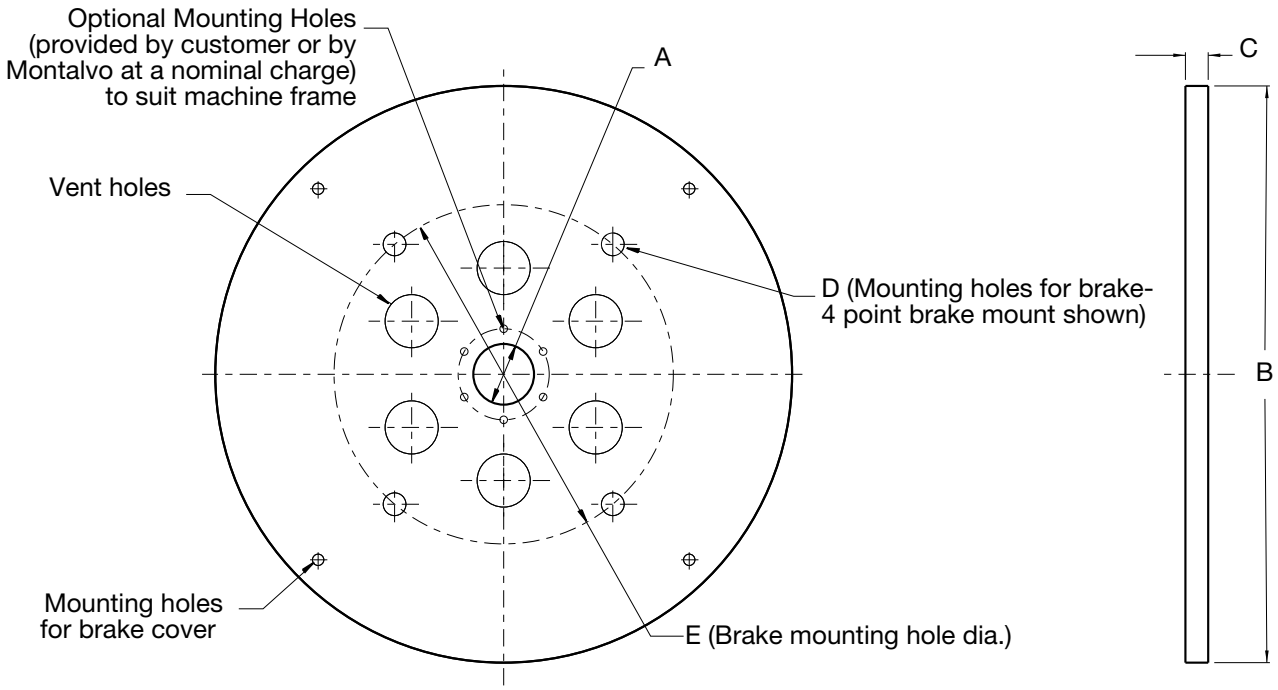

Dimensions in mm.

Model	A (I.D.)	B (O.D.)	C (Stahl)	D (Holes)	E (Dia.)
CD 100	39	250	6	4 Sets of 2	160
CD 130	45	278	6	6 Sets of 2	192
CD 190	51	483	13	6 Sets of 2	252
600/801-804	63	483	12	4	285/335
HP 6/HP 801-804	63	483	12	4	285/335
STD/HP 805-806	89	584	12	3	384
STD/HP 1001-1004	89	584	12	4	371
HP 101-102	89	584	12	4	371
STD/HP 1005-1008	115	654	20	4	483
HP 103-104	115	654	20	4	483
STD/HP 1400	140	711	25	5	572
STD/HP 1700	140	762	25	5	588
HP 26	165	1067	32	8	914

Technical details subject to change without notice.

THE MONTALVO ADVANTAGE

- Full Range of Competitively Priced Tension Control Products
- Superior Quality & Service
- Unmatched Worldwide Reputation

montalvo

worldwide web control

The Montalvo Corporation, 50 Hutcherson Drive, Gorham, Maine 04038 USA
Tel: +1 207-856-2501 Fax: +1 207-856-2509 E-Mail: info@montalvo.com Internet: www.montalvo.com
Technical details subject to change without notice.