HPS Friction Module

03/01/2022-1

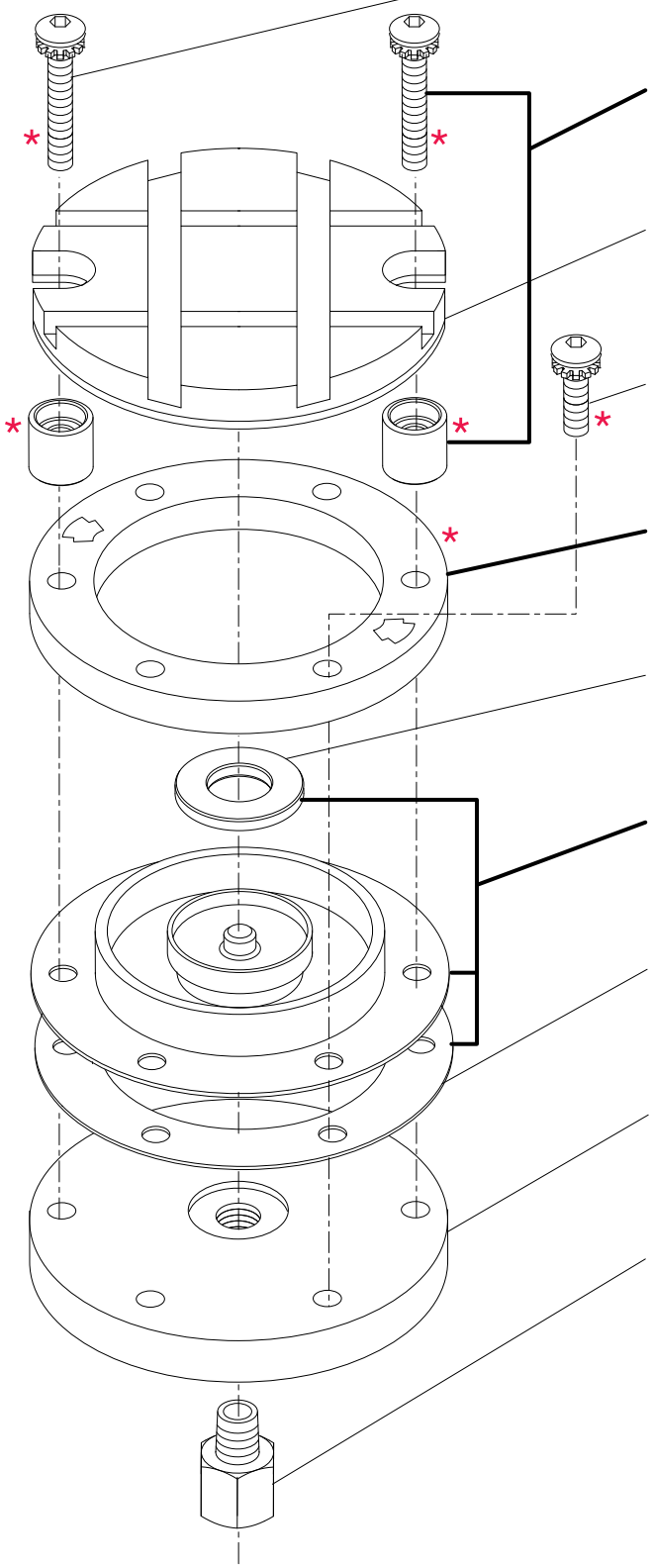

TORQUE POST SEMS SCREW (BHSS M5x0.8x25)

#10002014 ea.

TORQUE POST KIT (inc. 100002014)

#10002009 ea.

FRICTION PAD

many types available call for style

TORQUE COLLAR SEMS SCREW (BHSS M5x0.8x18)

#10002015 pkg. 50

TORQUE COLLAR KIT (includes all parts w/ *)

#10001830 ea.

STANDARD MAGNET

#10000266 ea.

STANDARD PISTON KIT (incl. magnet & gasket)

#10002048 box of 2

STANDARD GASKET

#10000270 ea.

HPS BASE PLATE

#27000010 ea.

NPT MALE TO FEMALE ADAPTER

#18000305 ea.

COMPLETE HPS FRICTION MODULE

#10001016 ea. *

* Price can vary depending on friction pad style

USA 1-800-226-8710 / +1-207-856-2501
CN +86-21-52188010
EU +45 75 57 27 11
DE +49 (0)511 760 691 41

Montalvo, 50 Hutcherson Drive, Gorham, Maine 04038 USA
info@montalvo.com www.montalvo.com

Prices and technical information subject to change without notice. © montalvo

EST. 1947 montalvo Better Web Control®