REVISIONS				
ZONE	REV.	DESCRIPTION	DATE	APPROVED
	A	UPDATED COMPONENTS / GEOMETRY MODIFIED	6/23/2020	CAO

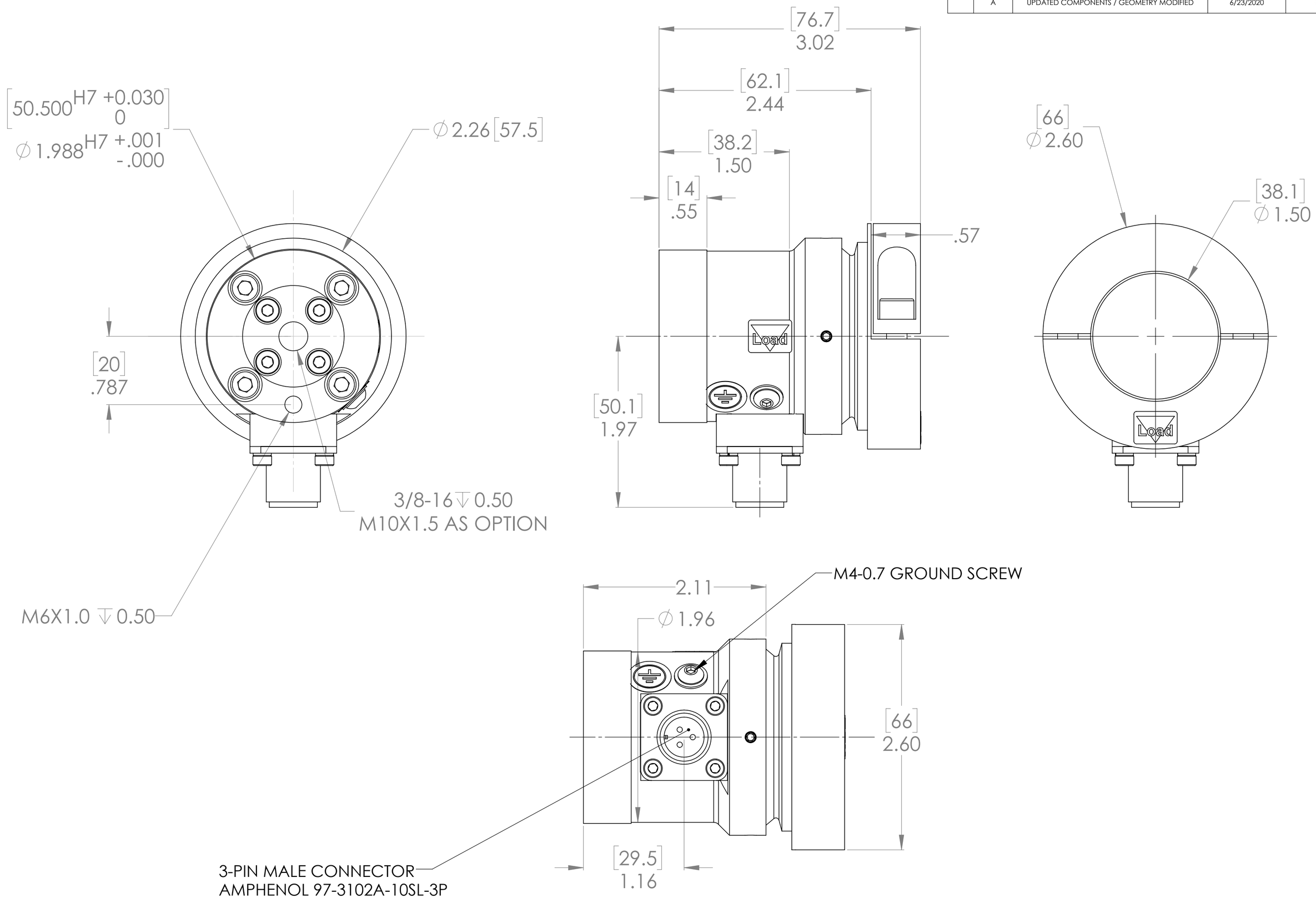

ALL DIMENSIONS INCH UNLESS OTHERWISE SPECIFIED

METRIC TOLERANCES PER ISO 2768-f

DEBURR AND BREAK ALL SHARP EDGES

PROPRIETARY AND CONFIDENTIAL

©THE MONTALVO CORPORATION 2017

ALL RIGHTS RESERVED. ANY USE OF THIS DRAWING OR THE INFORMATION CONTAINED HEREIN, FOR A PURPOSE OTHER THAN AS EXPRESSLY AUTHORIZED BY THE MONTALVO CORPORATION OR ITS SUBSIDIARY, DANAROTA TECHNIC A/S IS EXPRESSLY PROHIBITED.

UOS: .00 = ± .01
UOS: .000 = ± .005
UOS: .0000 = ± .0005
UOS: DRAFT ANGLE = 3°
UOS: ANGULAR: = ± 1/2°
UOS: FRACTIONAL: = ± 1/64
UOS: FINISH = AS SHOWN

© 2017

montalvo
Better Web Control®

The Montalvo Corp. 50 Hutcherson Drive Gorham, ME 04038
info@montalvo.com 1-800-266-8710

TITLE: LOAD CELL DR-D IDLER, SIZE S0-6

DRAWN BY: JMC	SIZE	Prt No.	Dwg No.	REV
CHK BY: CAO	C	12200001		A
DATE: 6/26/2020	SCALE: NONE			SHEET 1 OF 1