REVISIONS				
ZONE	REV.	DESCRIPTION	DATE	APPROVED
	-		-	

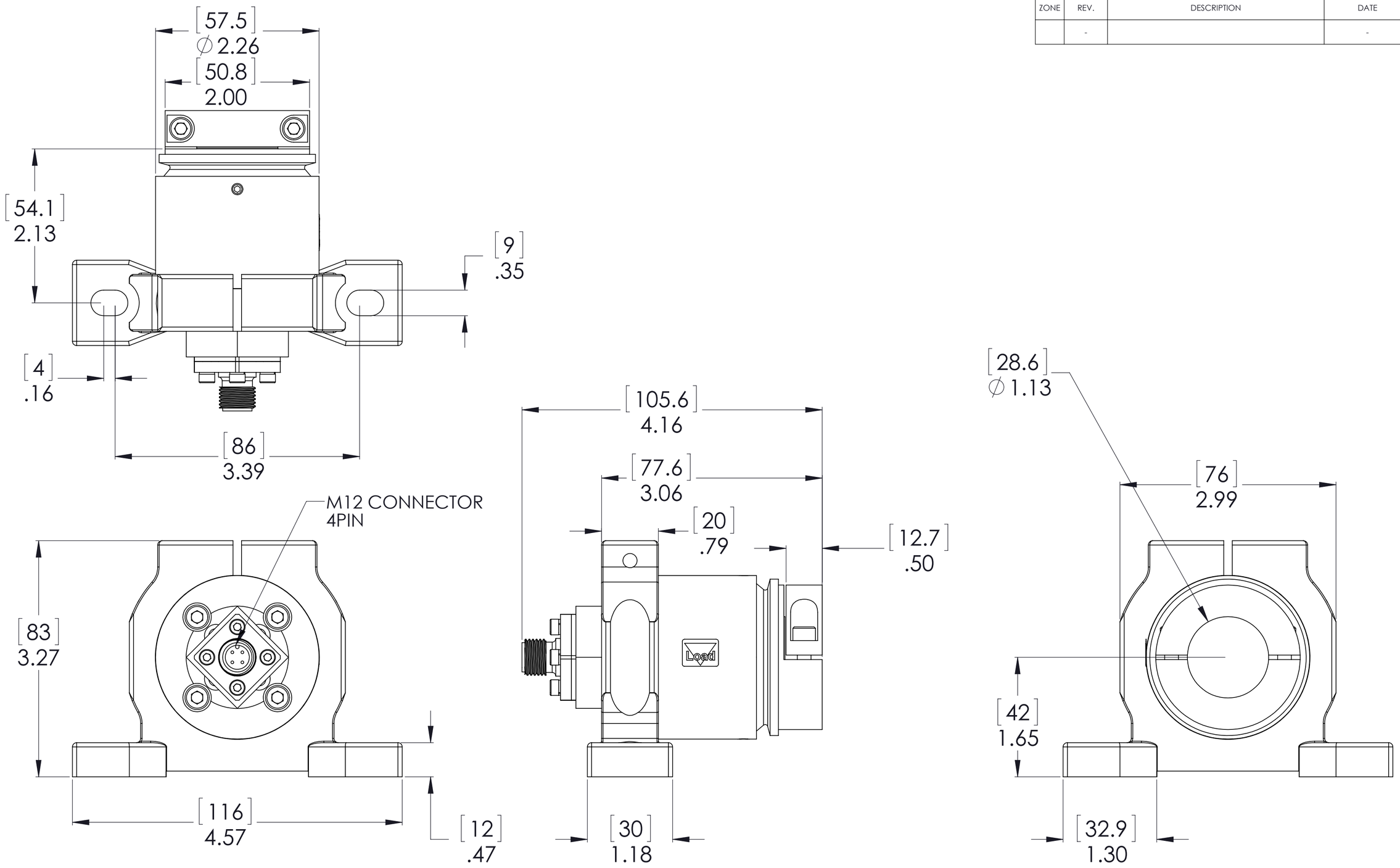

NOTES:
BREAK ALL SHARP EDGES

ALL DIMENSIONS INCH
UNLESS OTHERWISE SPECIFIED

METRIC TOLERANCES PER
ISO 2768-f

DEBURR AND BREAK ALL SHARP EDGES

PROPRIETARY AND CONFIDENTIAL

©THE MONTALVO CORPORATION 2011
ALL RIGHTS RESERVED. ANY USE OF THIS DRAWING OR THE INFORMATION CONTAINED HEREIN, FOR A PURPOSE OTHER THAN AS EXPRESSLY AUTHORIZED BY THE MONTALVO CORPORATION OR ITS SUBSIDIARY, DANAROTA TECHNIC A/S IS EXPRESSLY PROHIBITED.

UOS: .00 = ± .01
UOS: .000 = ± .005
UOS: .0000 = ± .0005
UOS: DRAFT ANGLE = 3°
UOS: ANGULAR: = ± 1/2°
UOS: FRACTIONAL: = ± 1/64
UOS: FINISH = AS SHOWN

© 2011

montalvo
Better Web Control®

The Montalvo Corp. 50 Hutcherson Drive Gorham, ME 04038
info@montalvo.com 1-800-266-8710

TITLE: LOAD CELL ES IDLER SIZE P0-BACKMOUNT

DRAWN BY: CAO	SIZE	Prt No.	Dwg No.	REV
CHK BY: GEL	C	99501224	99501224	-
DATE: 8/23/2011	SCALE: NONE		SHEET 1 OF 1	